Item # _____ C.S.I. Section 1142

COMBI

ABC SERIES
ELECTRIC BOILERLESS COMBI OVEN STEAMER

Model ABC7E
(shown stacked)

CLASSIFIED UL EPH NSF/ANSI 4

c UL us LISTED

SPECIFICATIONS

Vulcan Combi Oven, Electric, Boilerless, 7 level full size combi, Model ABC7E. Engineered and assembled with pride in USA. Just three knobs, no modes, only temperature, time and humidity for ultimate ease of use. Humidity level control automatically adjusts after setting temperature. Precision Humidity Control ensures accurate humidity for repeatable results while providing efficiency in energy and water usage. Multiple cooking capabilities from one piece of equipment: Baking, Steaming, Roasting, Air-Fry, Rethermalization, Proofing, Finishing, Poaching, Stewing, Low Temp and Defrosting results. Direct steam creation for optimized cooking capability and production with minimal energy and water consumption. Auto-reversing fan with electrical braking system on fan motor. Large LED displays for temperature, time and humidity controls. Visual recall display of actual temperature and humidity LED's. Timer reloads for batch cooking after completion of timed cycle. Flashing door lights & audible alarm system alert user when cooking cycle finished. Halogen lights (3) built into door behind heat reflective inner glass. Standard with rack guides and (4) unique stainless steel wire racks with cutout design for easy access to pans. Maximum capacity of (7) racks for a total of (7) 18" x 26" or (14) 12" x 20" pans. Machine diagnostics accessed thru controls or via USB. Cool to the touch & energy efficient heat reflective tempered glass door. All stainless steel interior cooking compartment, top, sides and fully insulated. One year limited parts and labor warranty.

Exterior Dimensions:
Combi: 35"H x 42.2"W x 43.3"D
Stand & Combi: 63.1"H x 42.2"W x 43.3"D
Stacked Combi: 75.2"H x 42.2"W x 43.3"D

- ☐ **ABC7E-208**
- ☐ **ABC7E-240**
- ☐ **ABC7E-480**

STANDARD FEATURES

- ■ Engineered and assembled with pride in Louisville, Kentucky, USA.
- ■ Just three knobs, no modes, only temperature, time and humidit
- ■ Patent-pending humidity level control automatically adjusts after setting temperature.
- ■ Exclusive Precision Humidity Control ensures accurate humidity for repeatable results while providing efficiency in energy and water usage.
- ■ Multiple cooking capabilities from one piece of equipment: Baking, Steaming, Roasting, Air-Fry, Rethermalization, Proofing, Finishing, Poaching, Stewing, Low Temp and Defrosting results.
- ■ Boilerless combi which uses direct steam creation for optimized cooking capability and production with minimal energy and wate consumption.
- ■ Auto-reversing fan with electronic braking system on fan motor.
- ■ Large LED displays for temperature, time and humidity controls.
  - Temperature range: 80-450°F
  - Timer range: continuous (--:--) up to 23:59 hours and minutes
  - Humidity range: 0-100%
- ■ Visual recall display of actual temperature and humidity LED's.
- ■ Timer reloads for batch cooking after completion of timed cycle.
- ■ Flashing door lights & audible alarm system alert user when cooking cycle finished.
- ■ Halogen lights (3) built into door behind heat reflective inner glas
- ■ Standard with rack guides and (4) unique stainless steel wire racks with cutout design for easy access to pans.
- ■ Machine diagnostics accessed thru controls or via USB.
- ■ Cool to the touch & energy efficient heat reflective tempered glass door.
- ■ All stainless steel interior cooking compartment, top, sides and fully insulated.
- ■ One year limited parts and labor warranty.

OPTIONS

- ☐ Hollow Carbon Filter System (Minimum Filtration For Warranty):
  - CB15K-SYSTEM – 15,000 gal.
  - CB30K-SYSTEM – 30,000 gal.
- ☐ Water Softening (CBK system required for use with WS system)
  - WS-40 - 40 lb capacity
  - WS-80 - 80 lb capacity
- ☐ Second year extended limited parts and labor warranty contract

ACCESSORIES (Packaged & Sold Separately)

- ☐ ADDRACK-ABC1 – (1) One additional wire rack
- ☐ ADDRACK-ABC3 – (3) Three additional wire rack kit
- ☐ 1220-BASKET – Fry Basket 12"x20"
- ☐ Stands & Stacking Kits include: (1) Spray Hose and Drip Tray Kit
  - STACK-ABC/E – Electric stacking kit for two ABC7E combis.
  - STAND-ABC/PC – Black powder coated open frame stand.
  - STAND-ABC/SS – Stainless steel open frame stand.
- ☐ BASE-ABC – Stainless steel base for open frame stand.
- ☐ HOSEWTR-3/4BBV - s/s flex water hose 72" length, ¾" female NSHT (2 per unit recommended).

VULCAN
a division of ITW Food Equipment Group LLC
P.O. Box 696 ■ Louisville, KY 40201 ■ Toll-free: 1-800-814-2028 ■ Local: 502-778-2791 ■ Quote & Order Fax: 1-800-444-0602

ABC SERIES
ELECTRIC BOILERLESS COMBI OVEN STEAMER

ATER QUALITY STATEMENT:

he fact that a water supply is potable is no guarantee that it is suitable r steam generation. All steam equipment is subject to contamination id failure due to chemical and mineral content found in water. A suitable obart Water Treatment System and regular filter replacements coupled ith routine deliming is the recommended minimum. Damage as a result poor water quality or lack of required owner/operator maintenance is e responsibility of the owner/operator.

our water supply must be within these general guidelines:

DYNAMIC WATER PRESSURE	30 - 60 psig
HARDNESS*	less than 3 grains
SILICA	less than 13 ppm
TOTAL CHLORIDE	less than 30 ppm
pH RANGE	7-8
CHLORINE & CHLORAMINE	0 ppm
ALKALINITY	less than 20 ppm
TDS	less than 60 ppm
UN-DISSOLVED SOLIDS	less than 5 microns

* 17.1 ppm = 1 grain of hardness

ther factors affecting steam generation are iron content, amount of lorination and dissolved gases. Water supplies vary from state to state id from locations within a state. Therefore it is necessary that the local ater treatment specialist be consulted before the installation of any eam generating equipment.

USER RESPONSIBILITY:

The product must be installed, cleaned and maintained as described in the Manual furnished with the product. It is the responsibility of the owner and installer to comply with local codes.

SERVICE CONNECTIONS:

Water: ¾" NSHT female split water line connections (filtered and unfiltered).

Drain: 1" NPT male connection piped to open drain, 60" maximum length before open air gap and not more than two bends or elbows.

Electrical: Field wire electrical connection 1.36" or 1.69" K.O. service entrance.

MODEL	PH	208V		240V		480V	
		KW	AMP	KW	AMP	KW	AMP
ABC7E	1	18	86.5	24	100	–	–
	3	18	50	24	57.8	24	28.9

Amperage values in the table are nominal. Tolerance is +5/-10%.
Always refer to the NEC, state and local codes.

NOTE:

Clearance: Left 1", Back 4", Right 3" required, 18" recommended for service access on right side.

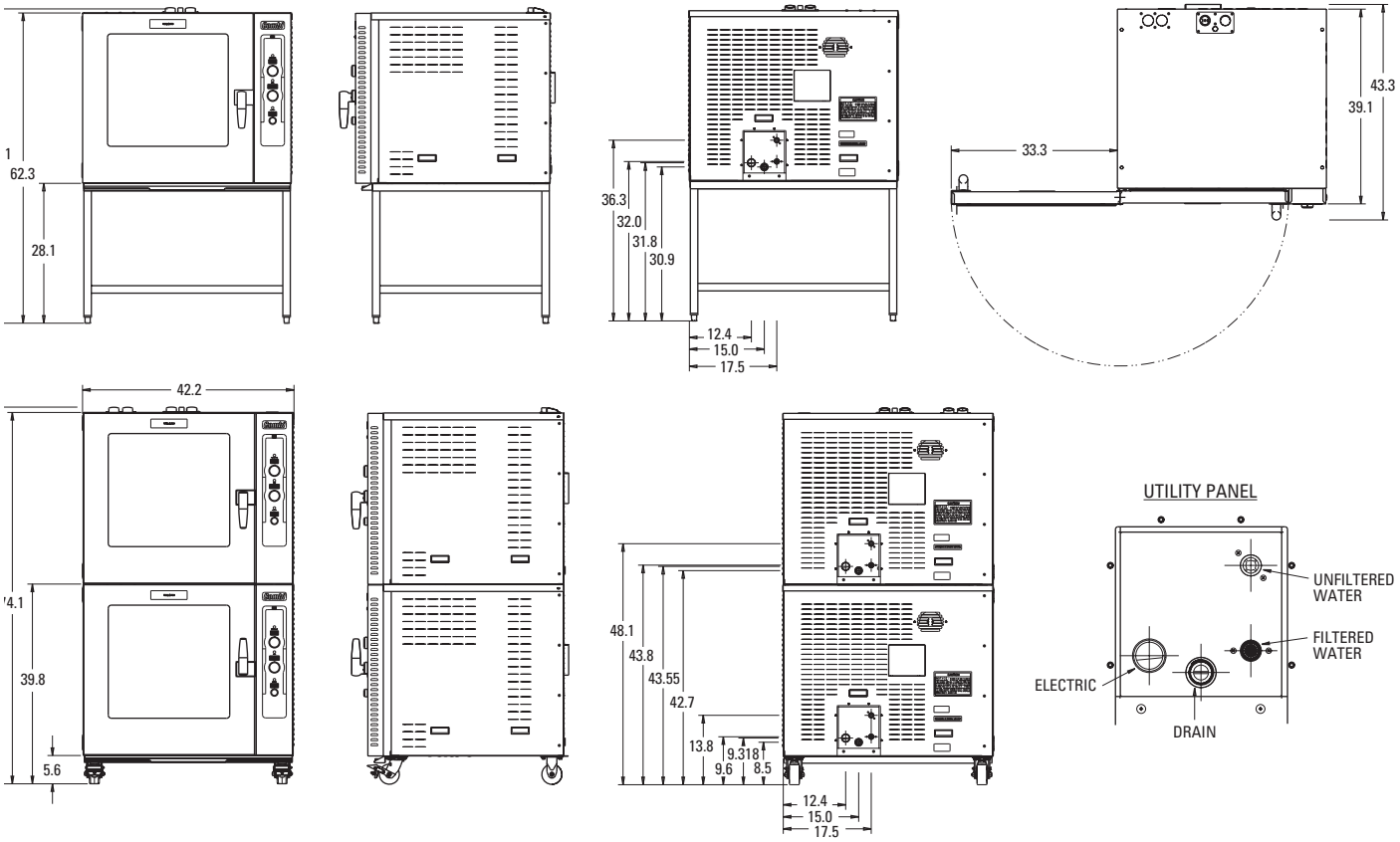

a division of ITW Food Equipment Group LLC

P.O. Box 696 ■ Louisville, KY 40201 ■ Toll-free: 1-800-814-2028 ■ Local: 502-778-2791 ■ Quote & Order Fax: 1-800-444-0602

NOTE: In line with its policy to continually improve its products, Vulcan reserves the right to change materials and specifications without notice.

Item # _____

Quantity _____

C.S.I. Section 1

HOBART
701 S Ridge Avenue, Troy, OH 45374
1-888-4HOBART • www.hobartcorp.com

WATER TREATMENT SYSTEMS STEAMER/COMBI (FLASH TYPE) APPLICATIONS

STANDARD FEATURES

- Single cartridge hollow carbon filter system includes mounting bracket, ¾" NPTF inlet and outlet, shut-off valve, test port, and gauge.
- Reduce Chloramine, Chlorine, Sediment, Bad Tastes and Odors, Total Organic Compounds, Tannins and Trihalomethanes
- Modular design is adaptable to accommodate changing water conditions
- Simple to install and service
- FOR COLD WATER USE ONLY
  Min./Max. Pressure: 40 – 125 psi
  Min./Max. Temperature: 40° – 100° F
  – CB15K-SYSTEM (00-847487-00001)
  Rated Capacity (Gallons)*: 15,000
  Flow Rate: 3.7 gpm
  Shipping Weight: 18 Lbs.
  – CB30K-SYSTEM (00-847487-00002)
  Rated Capacity (Gallons)*: 30,000
  Flow Rate: 5 gpm
  Shipping Weight: 20 Lbs.
- Quick-Change cartridge design for replacement without tools
- Replacement Cartridge Filters:
  CB15K-PMKIT - 15,000 Gallon Rated Capacity (00-847487-1PMK)
  CB30K-PMKIT - 30,000 Gallon Rated Capacity (00-847487-2PMK)
- Exterior dimensions:
  CB15K-SYSTEM 14" w x 9" d x 23⅞
  CB30K-SYSTEM 14" w x 9" d x 28⅞

MODELS

- ❑ **CB15K-SYSTEM**
- ❑ **CB30K-SYSTEM**

Specifications, Details and Dimensions on Reverse Side.

NSF

* Independently tested by an E.P.A. approved laboratory to ANSI/NSF Standard 42 & 53 specifications for the reduction of Cyst, Particulate Class I, Chlorine, Chloramine, Taste and Odor.

erica 4 Star Representatives Inc Page: 2

WATER TREATMENT SYSTEMS
STEAMER/COMBI (FLASH TYPE)
APPLICATIONS

HOBART
701 S Ridge Avenue, Troy, OH 45374
1-888-4HOBART • www.hobartcorp.com

NOTICE:

- Failure to replace cartridge before end of capacity life can result in pitting, rusting and discoloration due to Chloramines and Chlorine in water supply.
- Routine filter replacement & deliming are required for warranty consideration.
- This filter does not remove scale build-up due to hardness or other contaminants that may be in water.
- Hardness will result in scale build-up. Deliming is required to remove scale build-up or use of an additional treatment such as a water softener is recommended.
- Gallon capacity will vary according to flow rate, inlet pressure and local water conditions.
- Replace cartridge if outlet pressure gauge is less than 20 psi. or before end of capacity life (Maximum cartridge operating life 1 year.)

Water Quality Statement

The fact that a water supply is potable is no guarantee that it is suitable for steam generation. Systems are not to be used where water is microbiologically unsafe or with water of unknown quality without adequate disinfections before and after use. Other factors affecting steam generation include iron content, amount & type of chlorination, and dissolved gasses. Water supplies vary from state to state and from locations within a state.

As with all steam related products, water filtration and regular filter replacements coupled with routine Deliming are required. Your local Hobart office can recommend a water treatment or filtration system to meet the needs of your local water conditions. Contact your local Hobart representative for water treatment offerings.

Note:

- Installation of backflow preventers, vacuum breakers and other specific code requirements is the responsibility of the owner and installer in compliance with local codes.

Recommended filter clearance needed for access:

Front	13"
Bottom	4"

This appliance is manufactured for commercial installation only and not intended for home use.

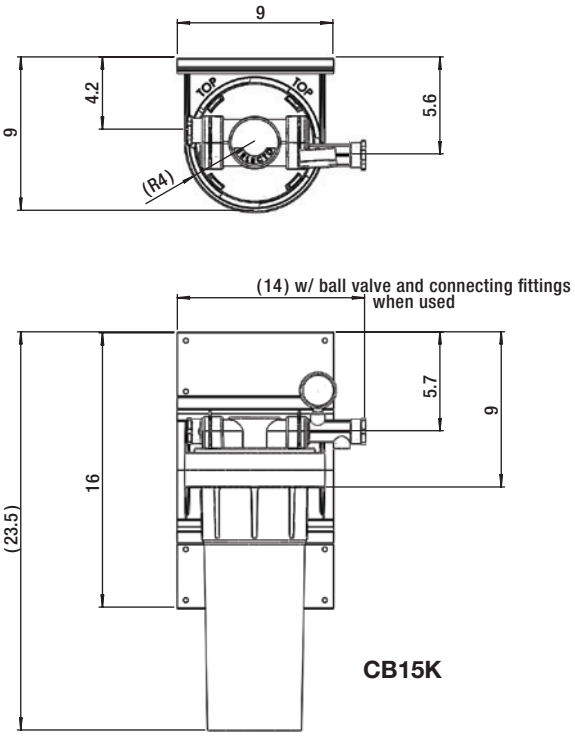

CB15K

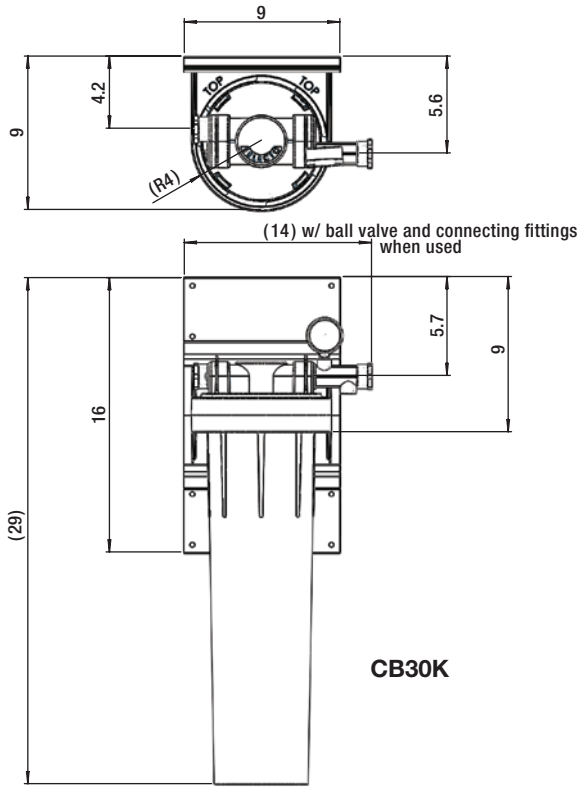

CB30K

EXTERIOR DIMENSIONS:

MODEL	WIDTH	DEPTH	HEIGHT
CB15K-SYSTEM	14"	9"	23⅞
CB30K-SYSTEM	14"	9"	28⅞

As continued product improvement is a policy of Hobart, specifications are subject to change without notice.